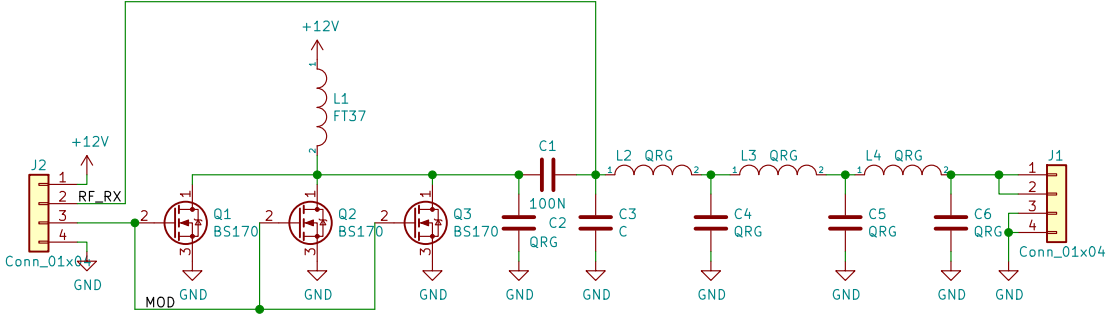
+12V
L1
FT37
+12V
J2
RF_RX
Conn_01x04
GND
MOD
Q1
BS170
Q2
BS170
Q3
BS170
GND
GND
GND
C1
100N
C2
QRG
C3
C
L2 QRG
L3 QRG
L4 QRG
C4
QRG
C5
QRG
C6
QRG
J1
Conn_01x04
GND
GND
GND
GND
GND
GND
GND
GND